bticino

150431
150432
150433
150434

150439
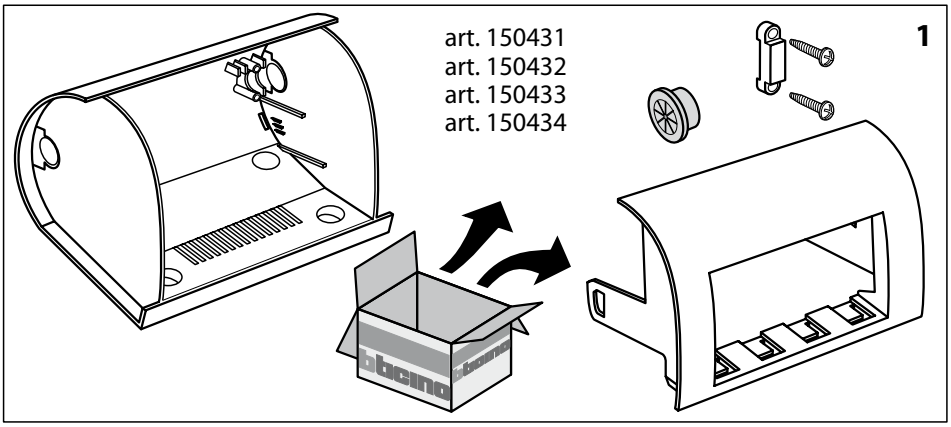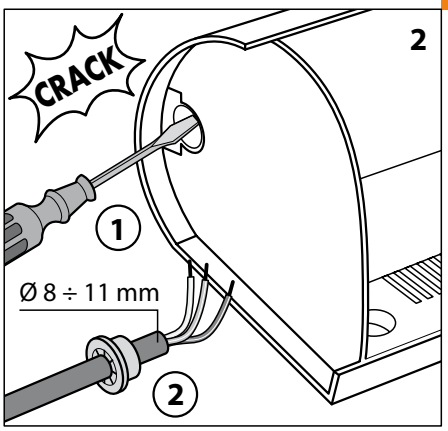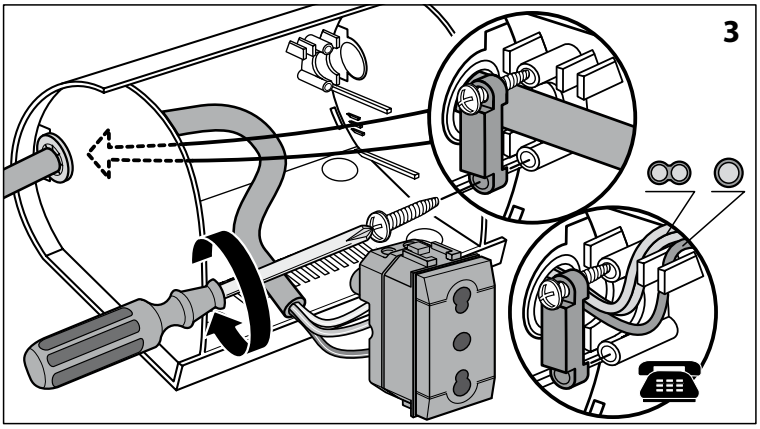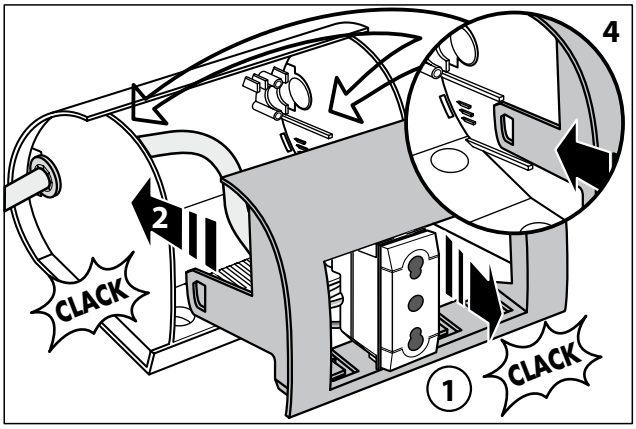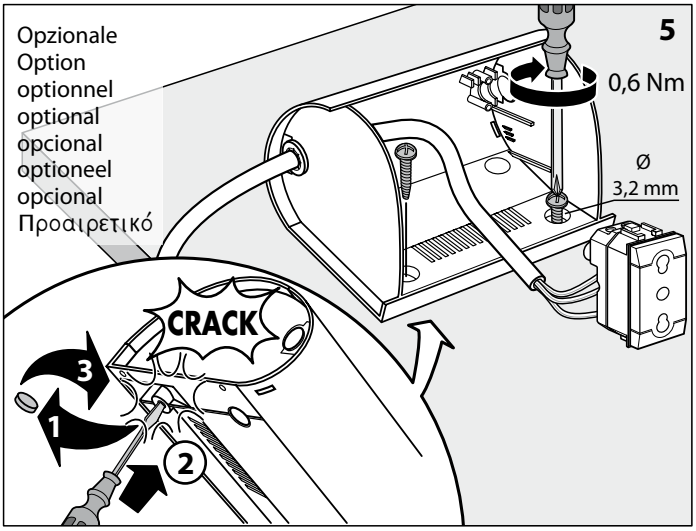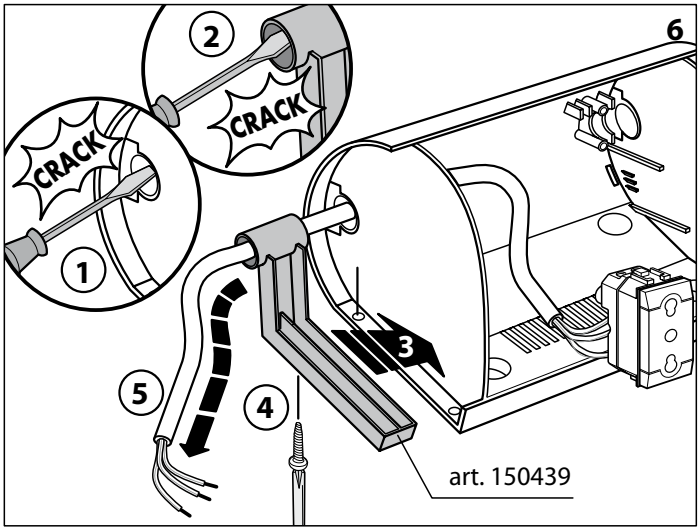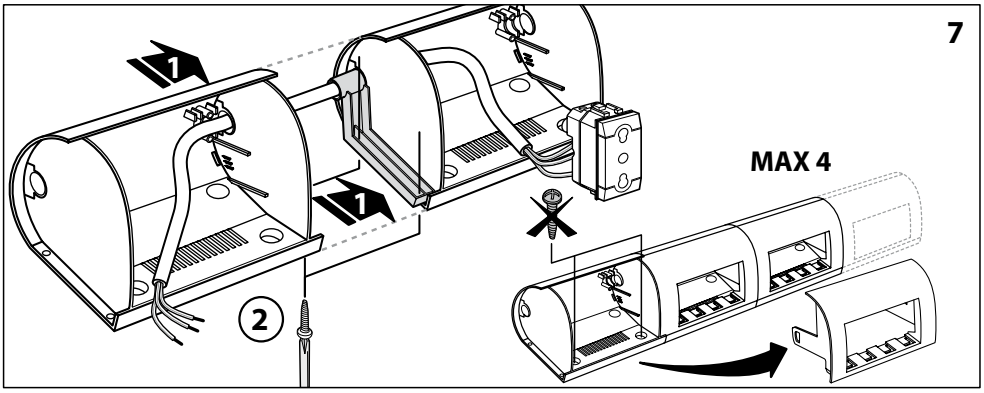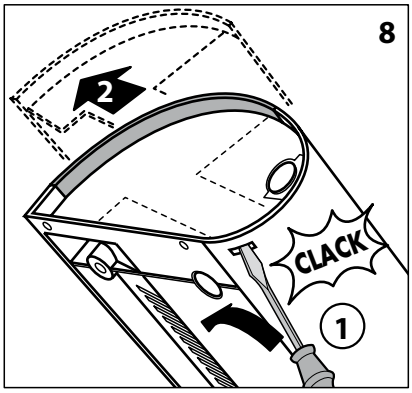
F0751D01AP-11W4