bticino

HC4280 N4280
HD4280 NT4280
HS4280 AM4280
L4280
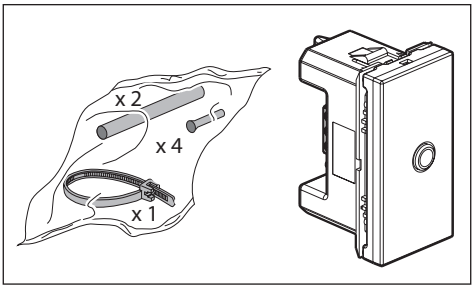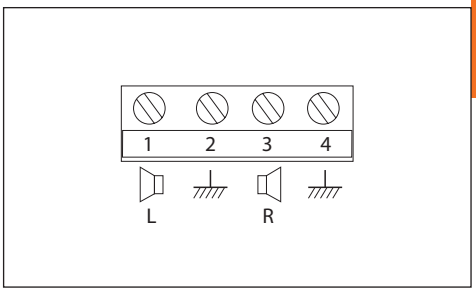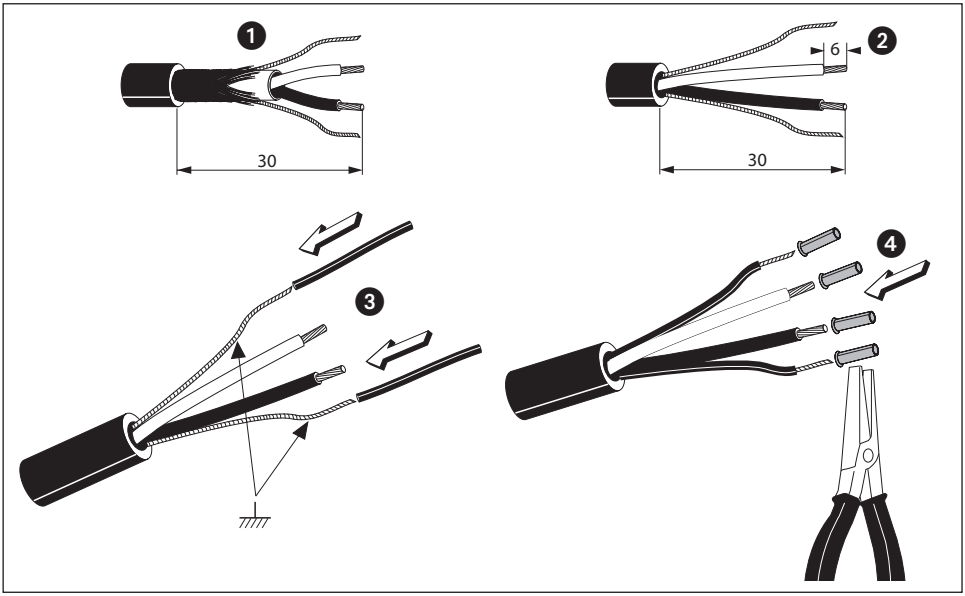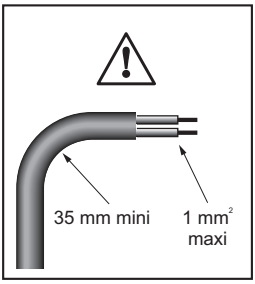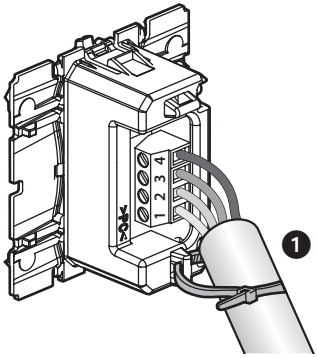
G7156A01PC-10W21