Legrand
6316 23/24/25/26/27/28

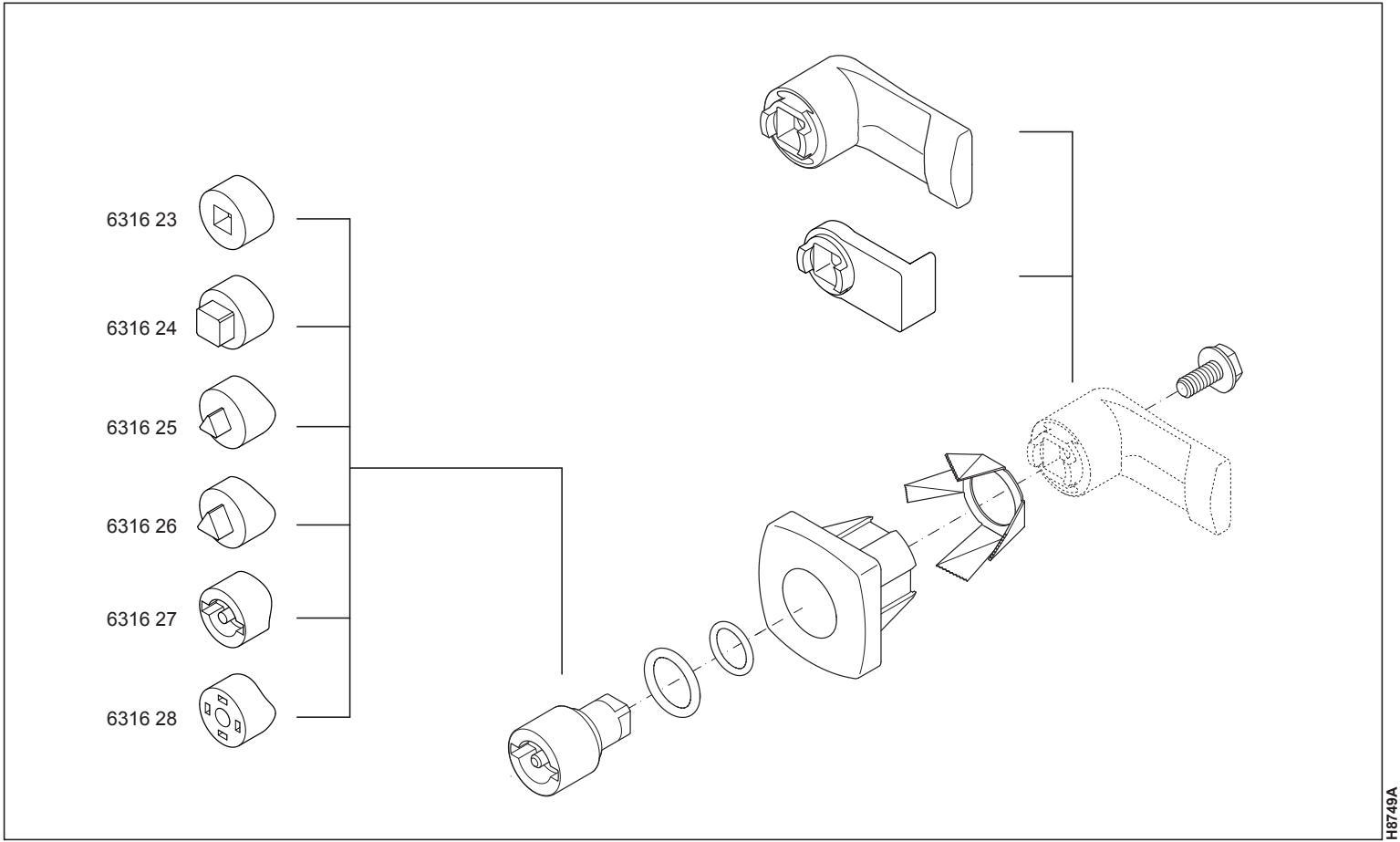

H8749A

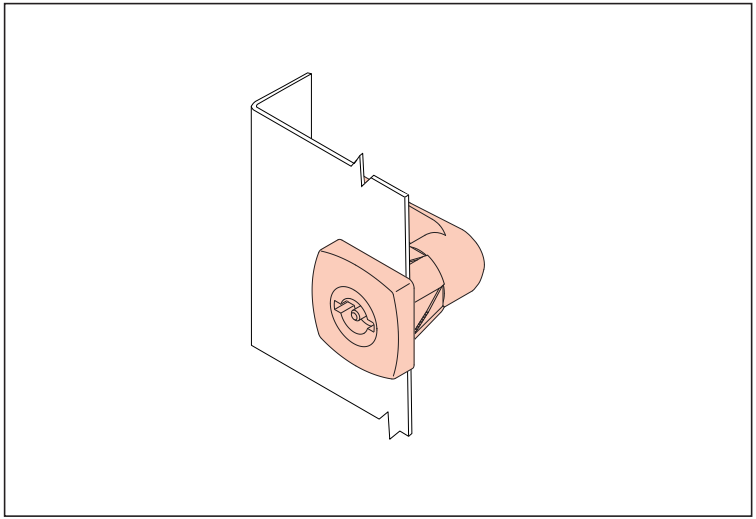

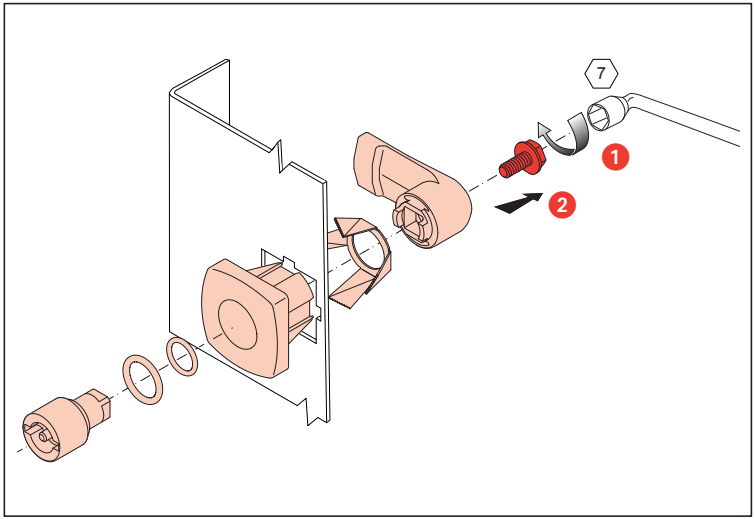
7
1
2

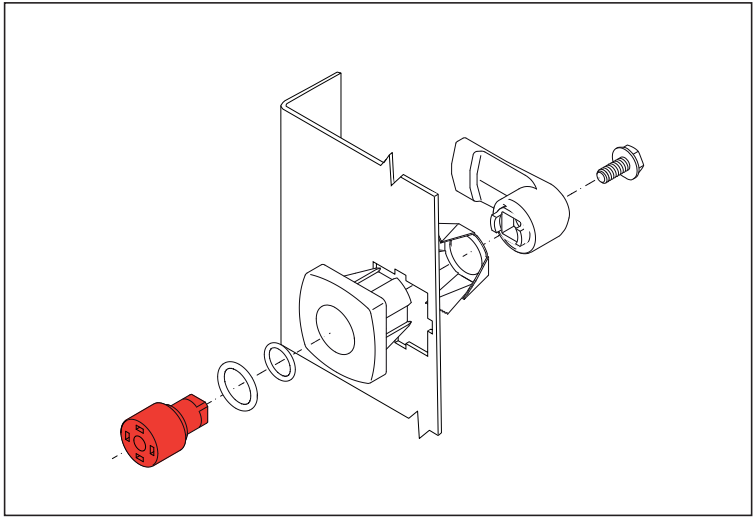

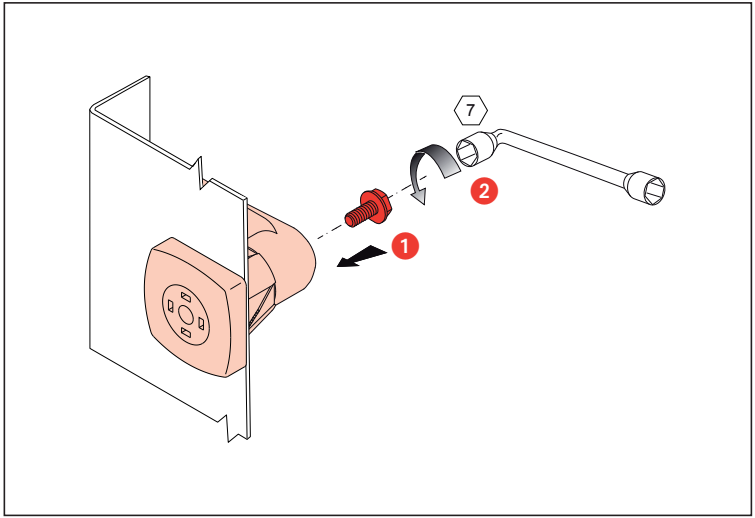
7
2
1