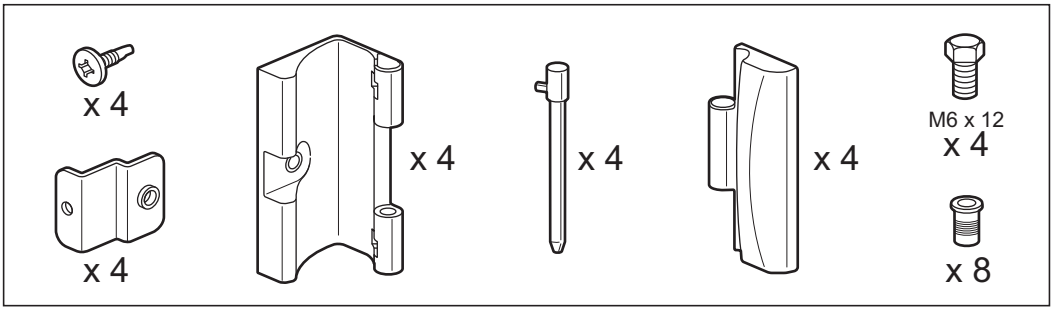
x 4
x 4
x 4
x 4
x 4
M6 x 12
x 4
x 8

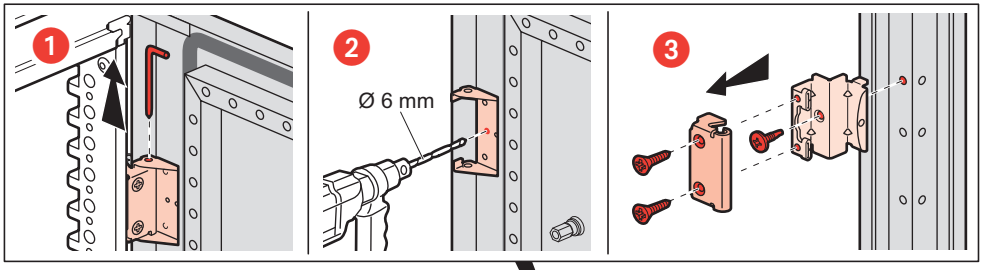
1
2
Ø 6 mm
3

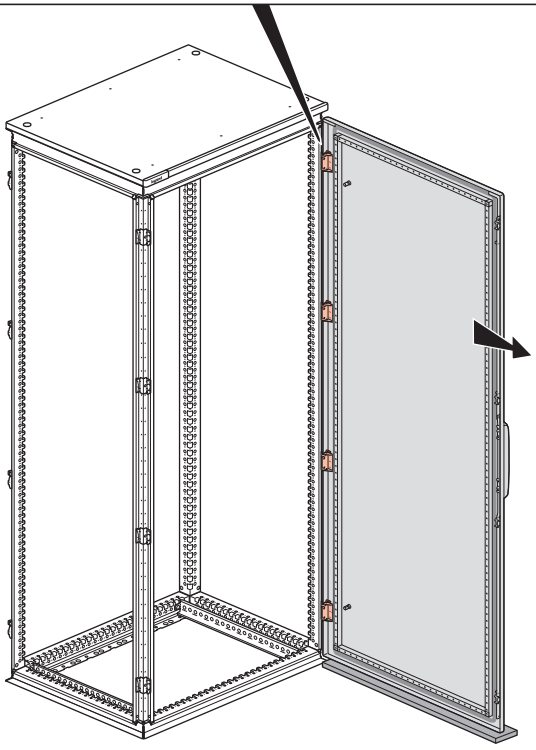

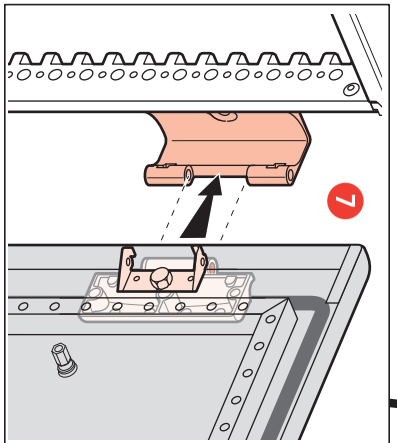

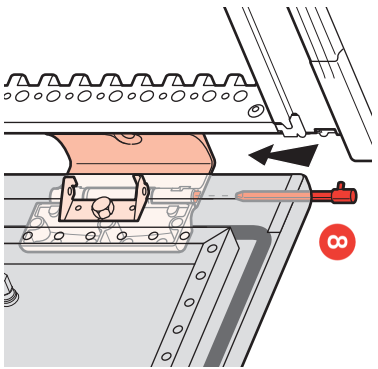

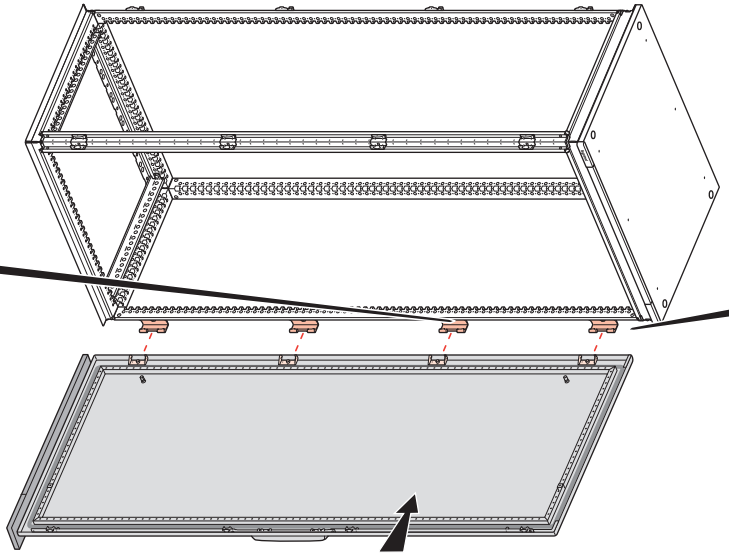

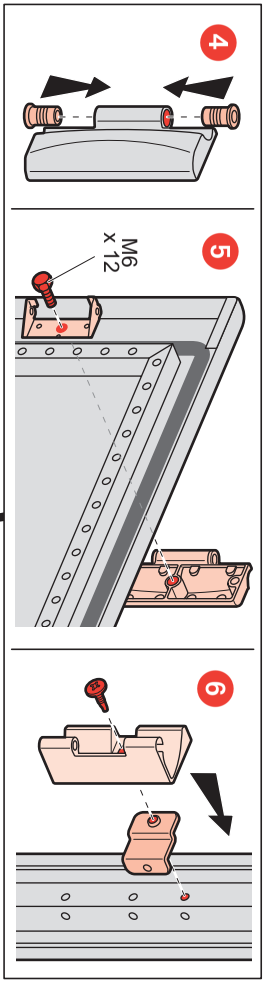

N042525/00 - H8755A