bticino

BSBA204AB

LE07801AA-01PC-14W51

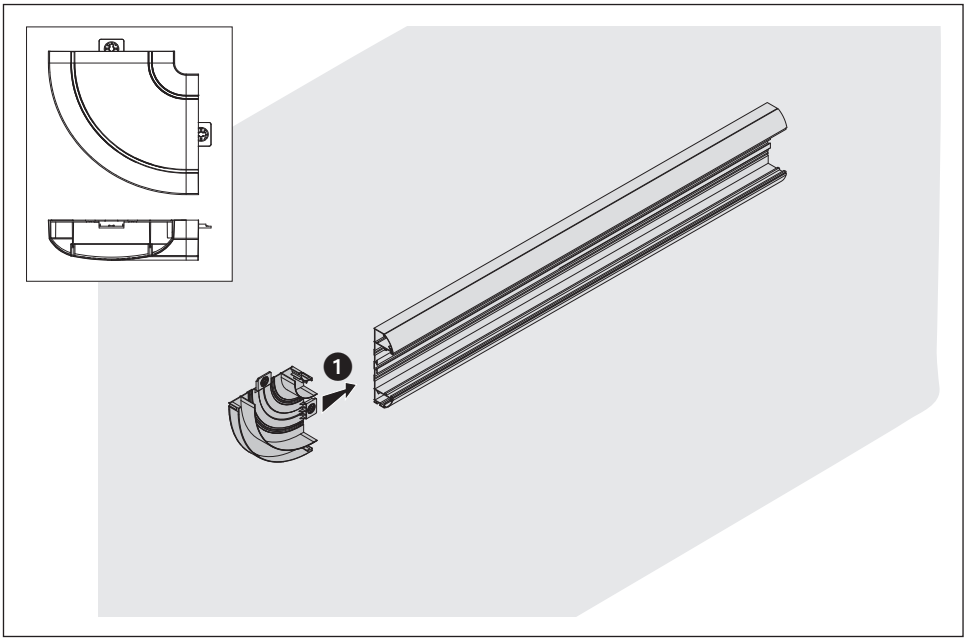

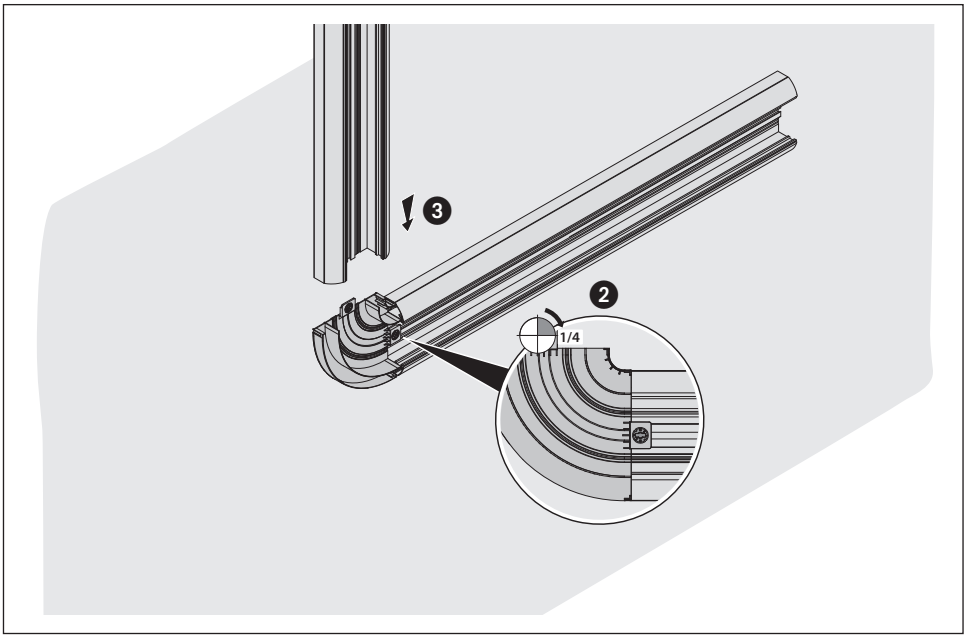

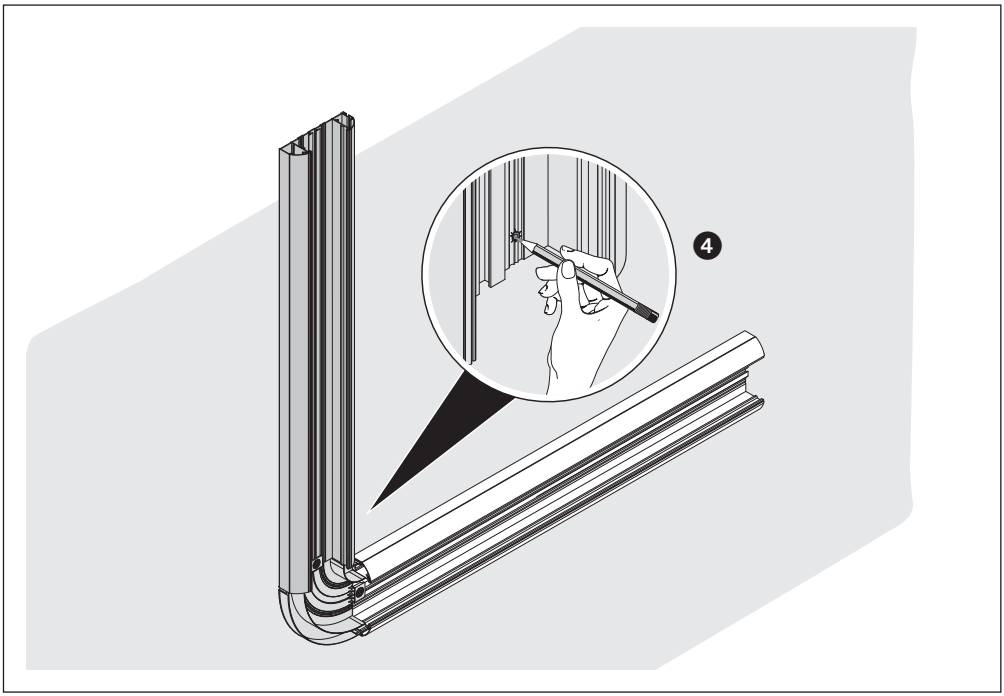
4

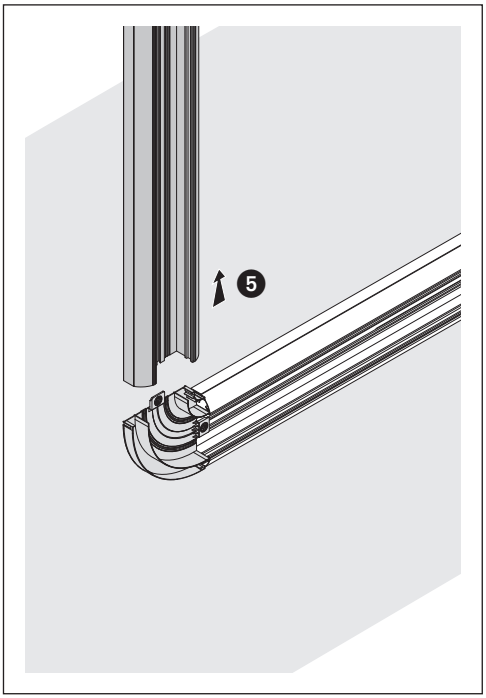
5

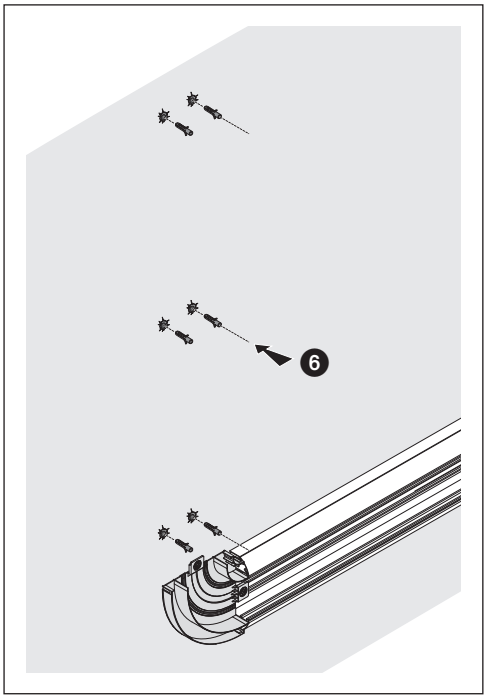
6

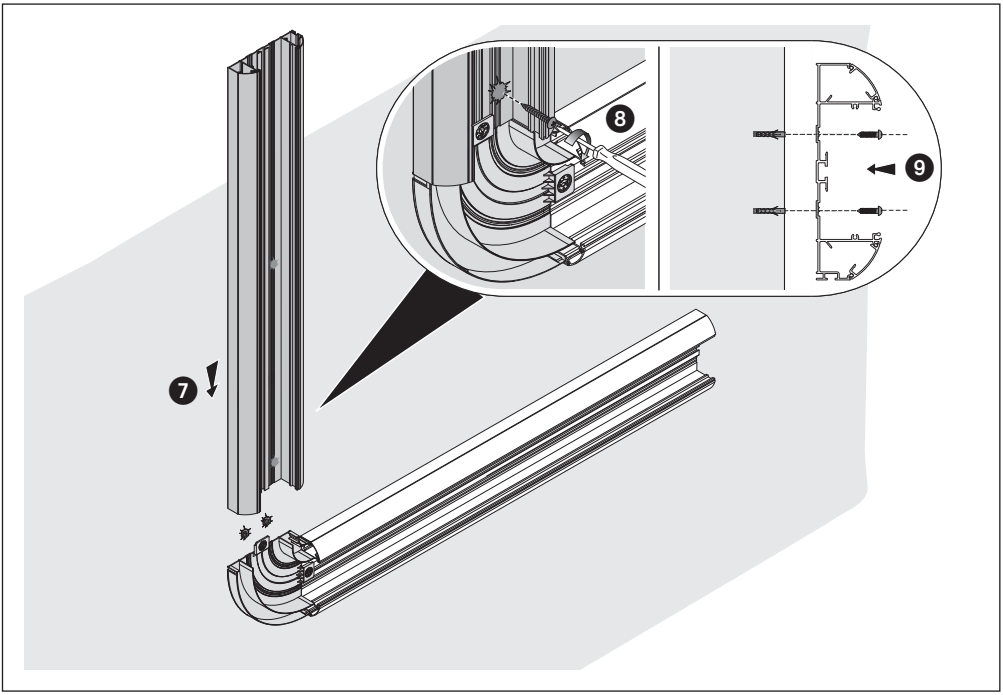
7
8
9

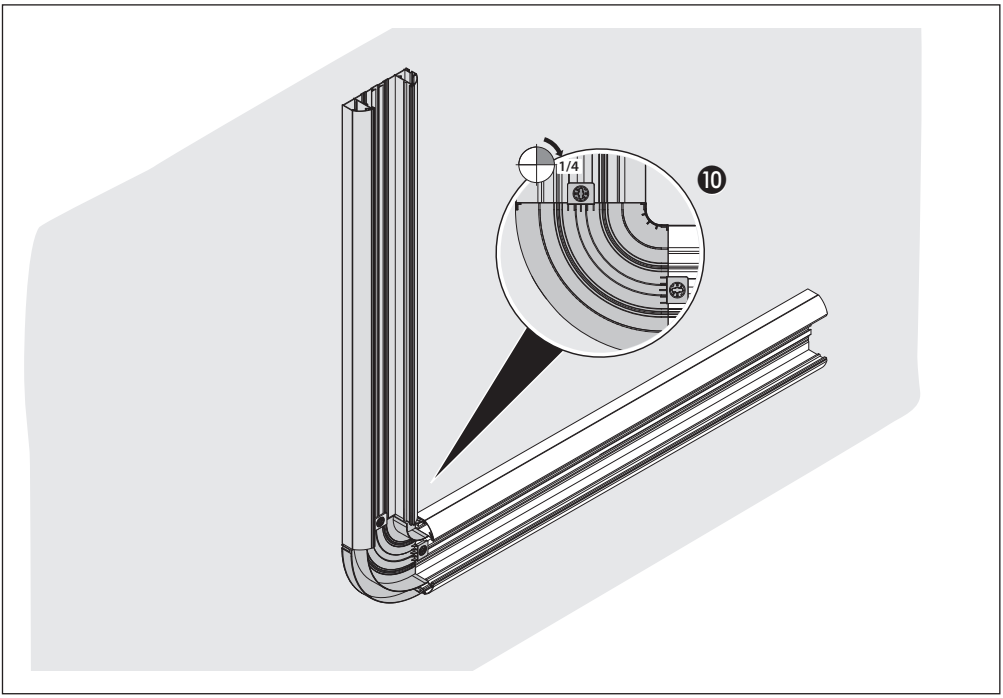
1/4
10

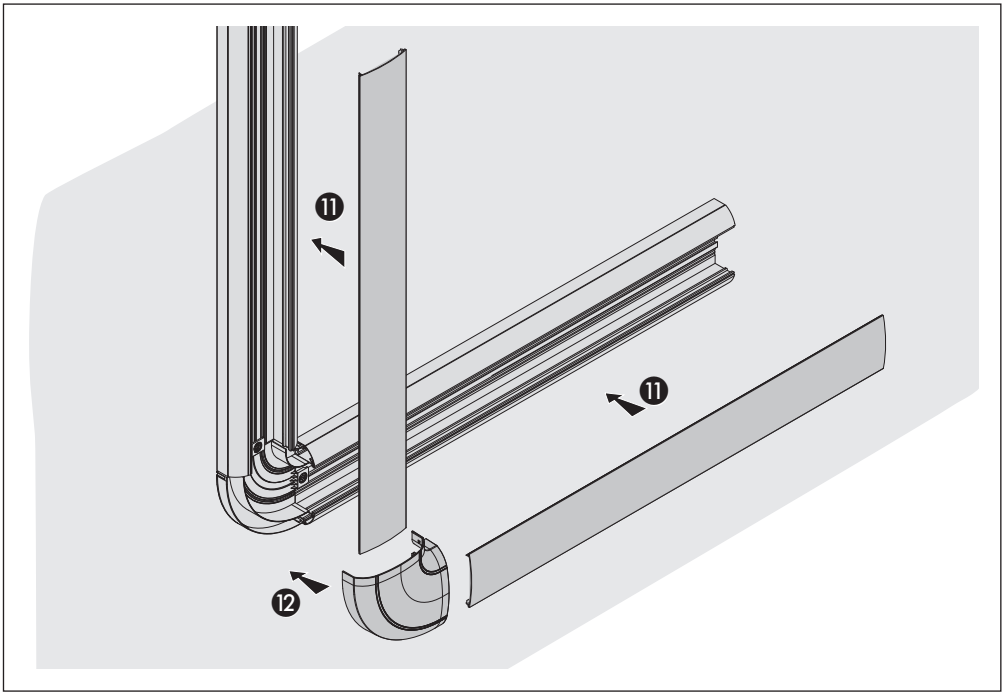
11
11
12