Atlantic

legrand®

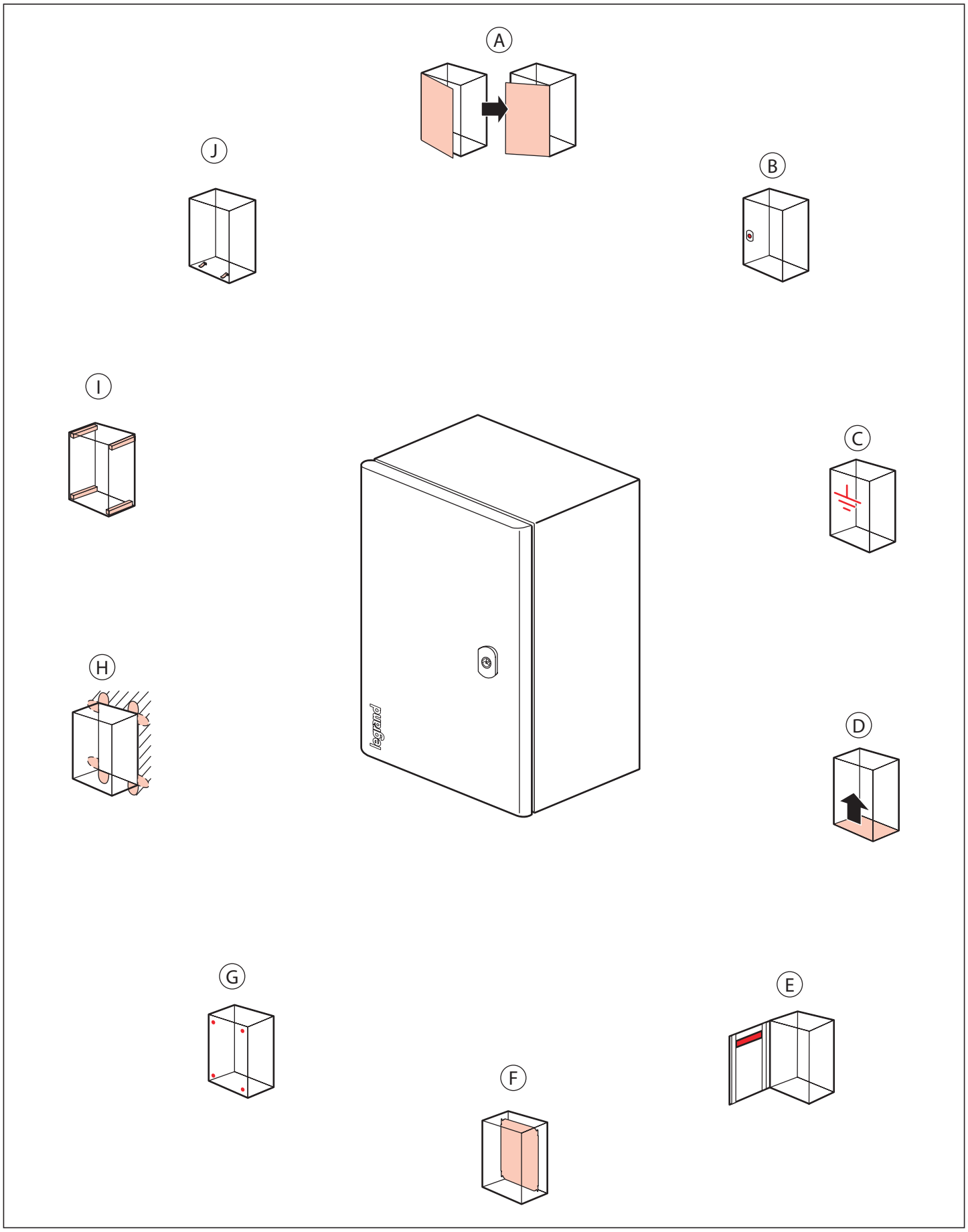

LE08262AA-00

A

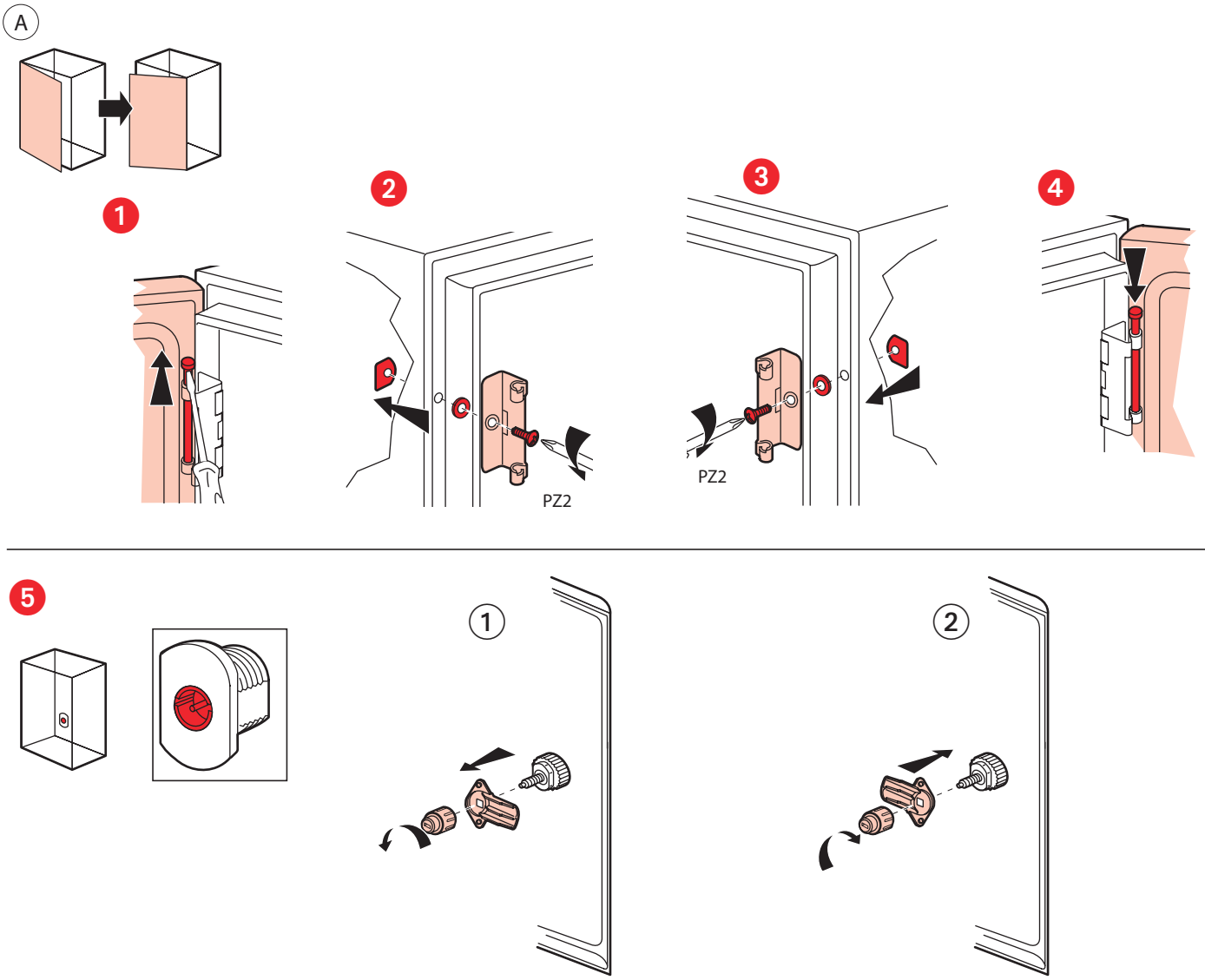

B

C

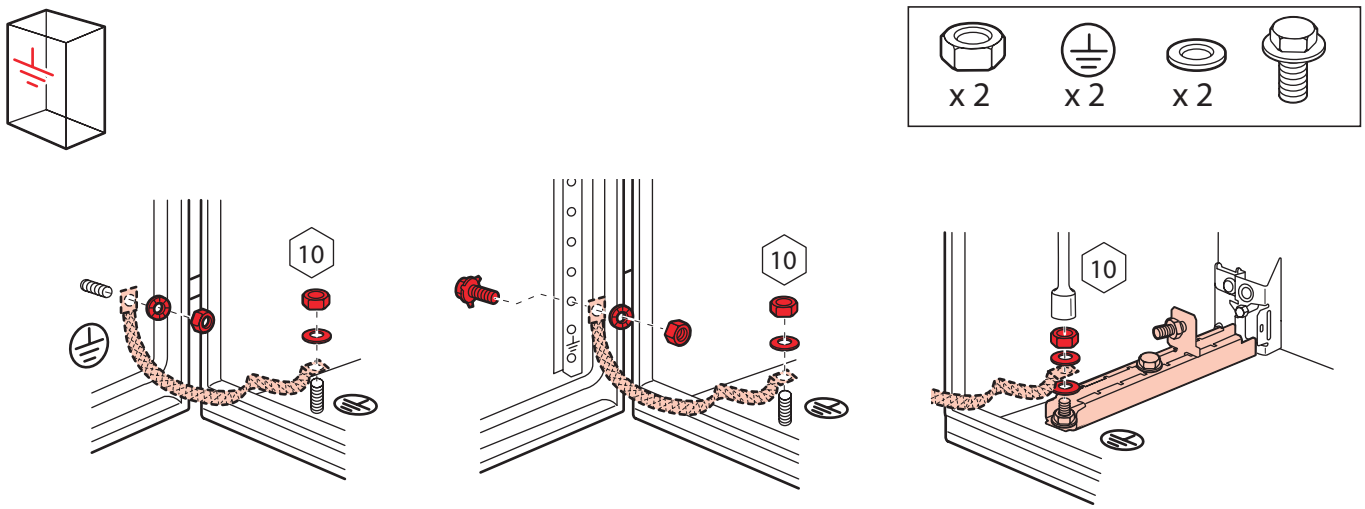

LE08262AA-00

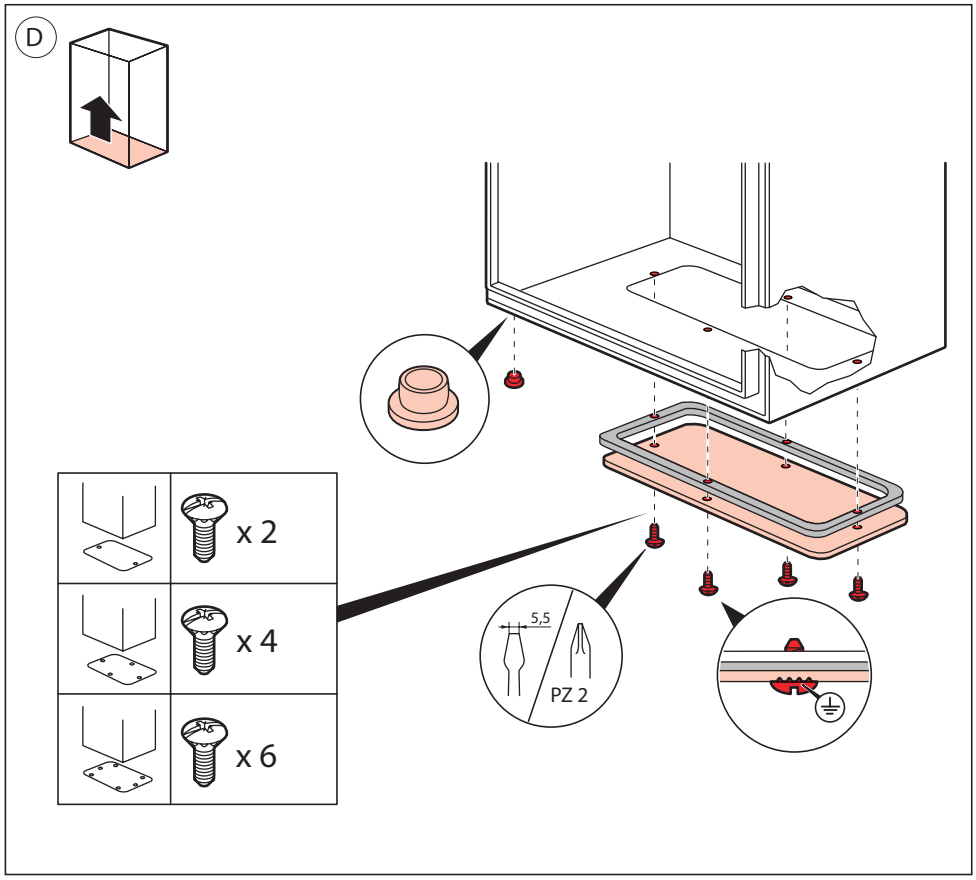

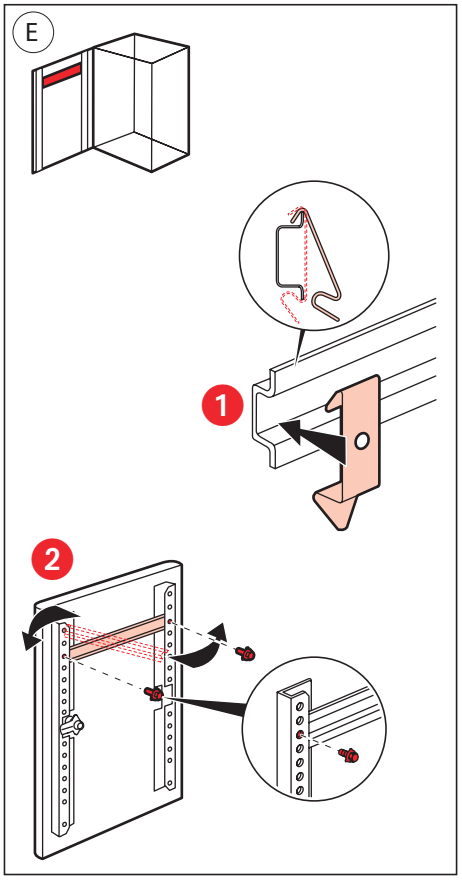

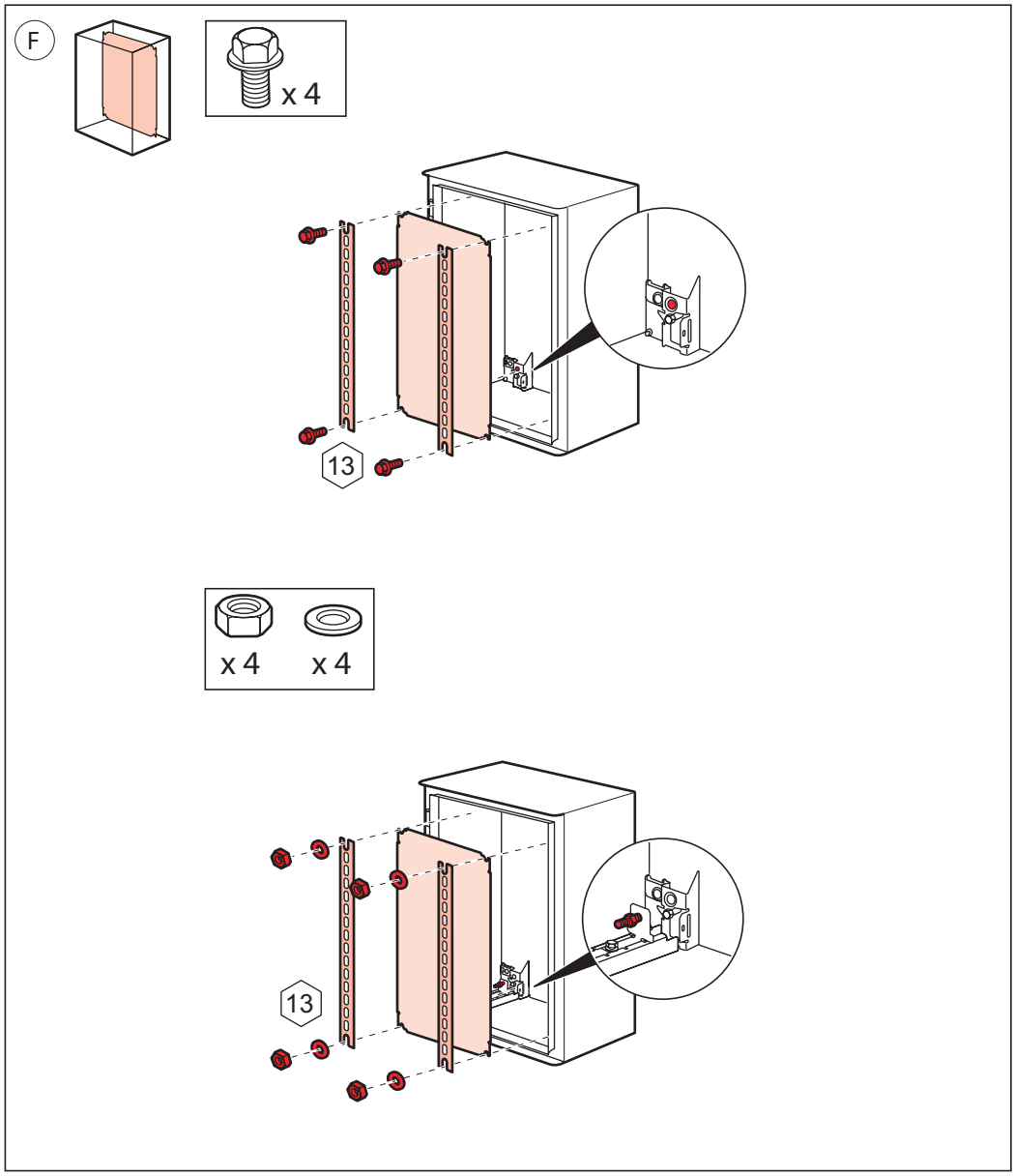

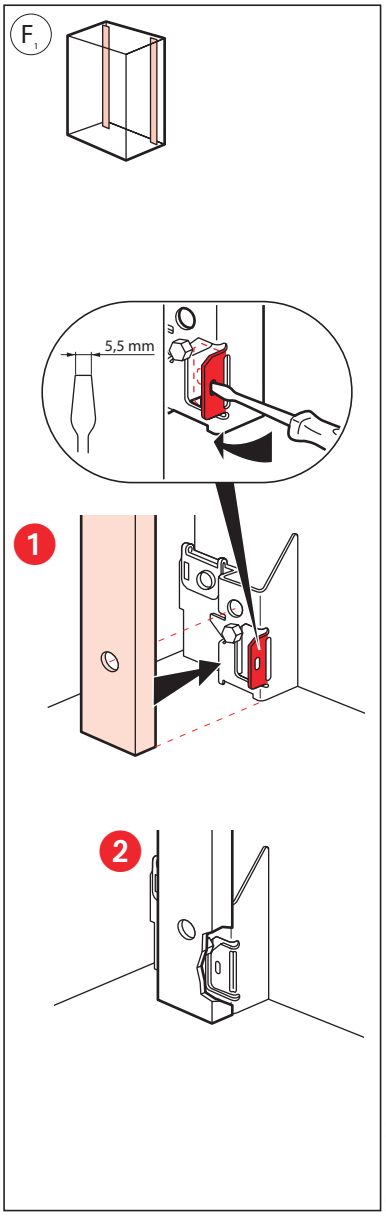

LE08262AA-00

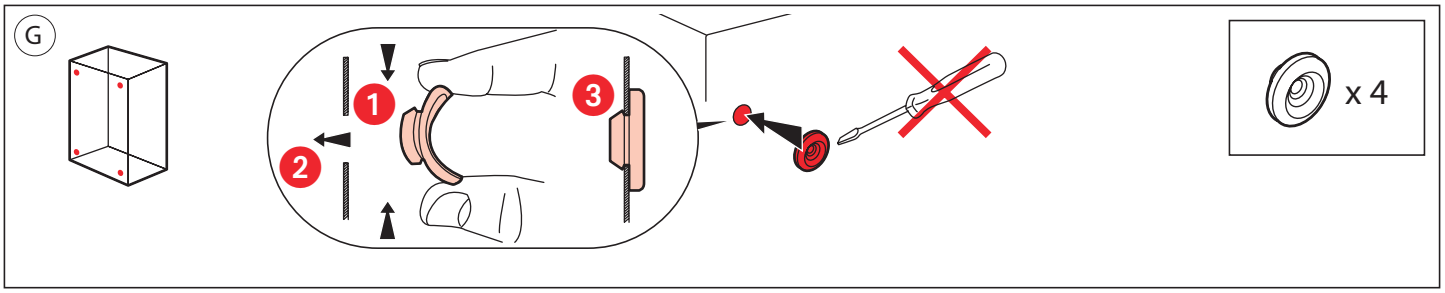

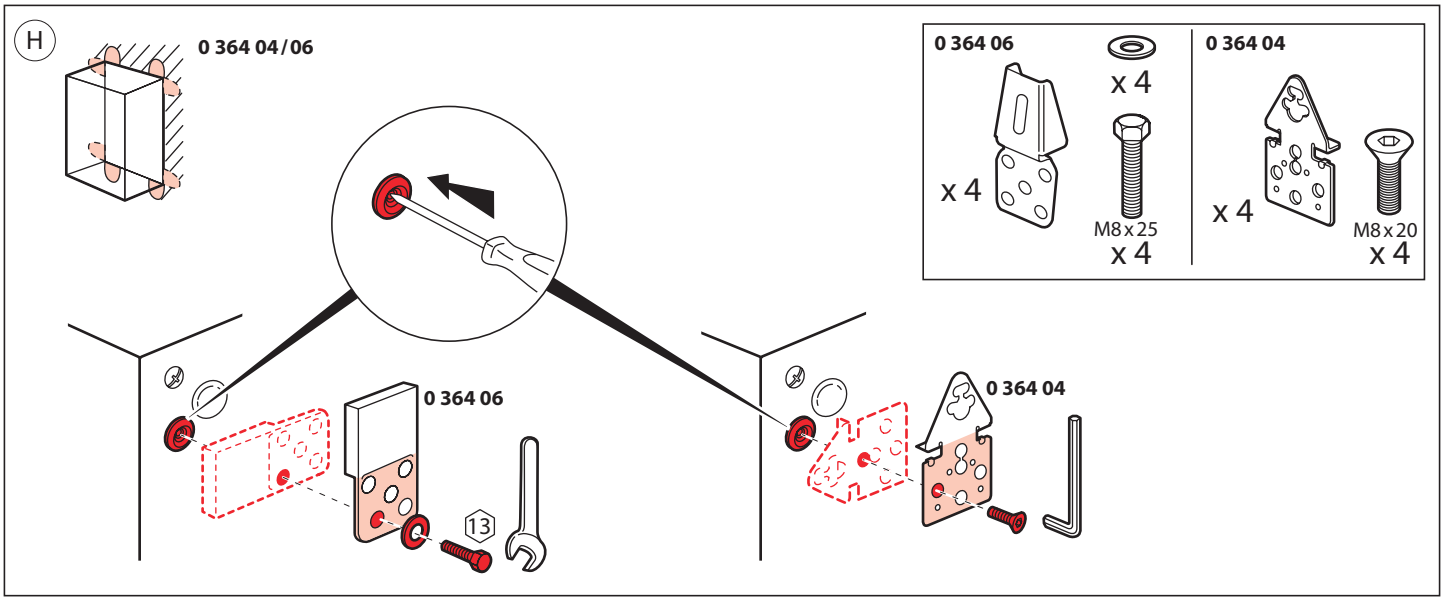

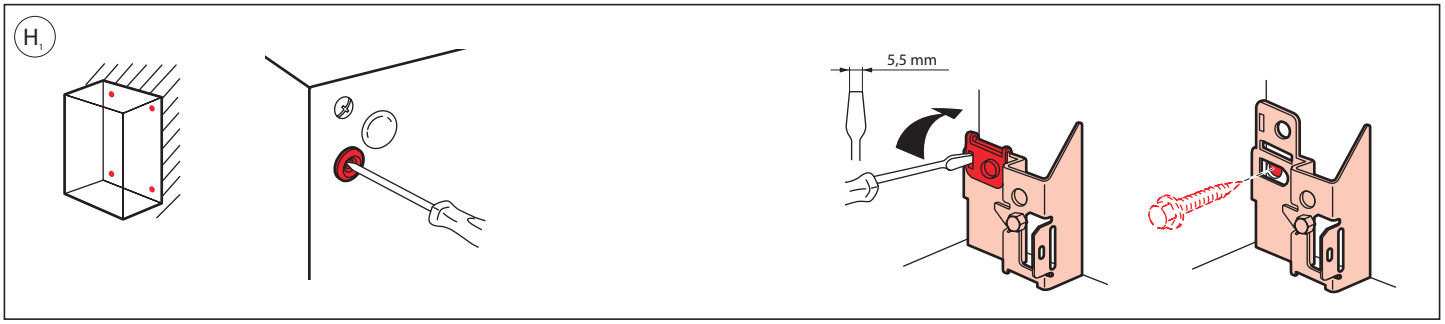

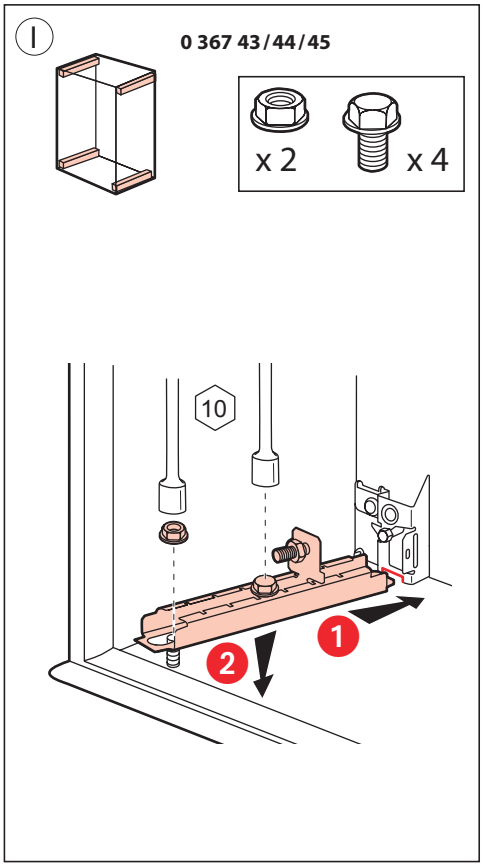

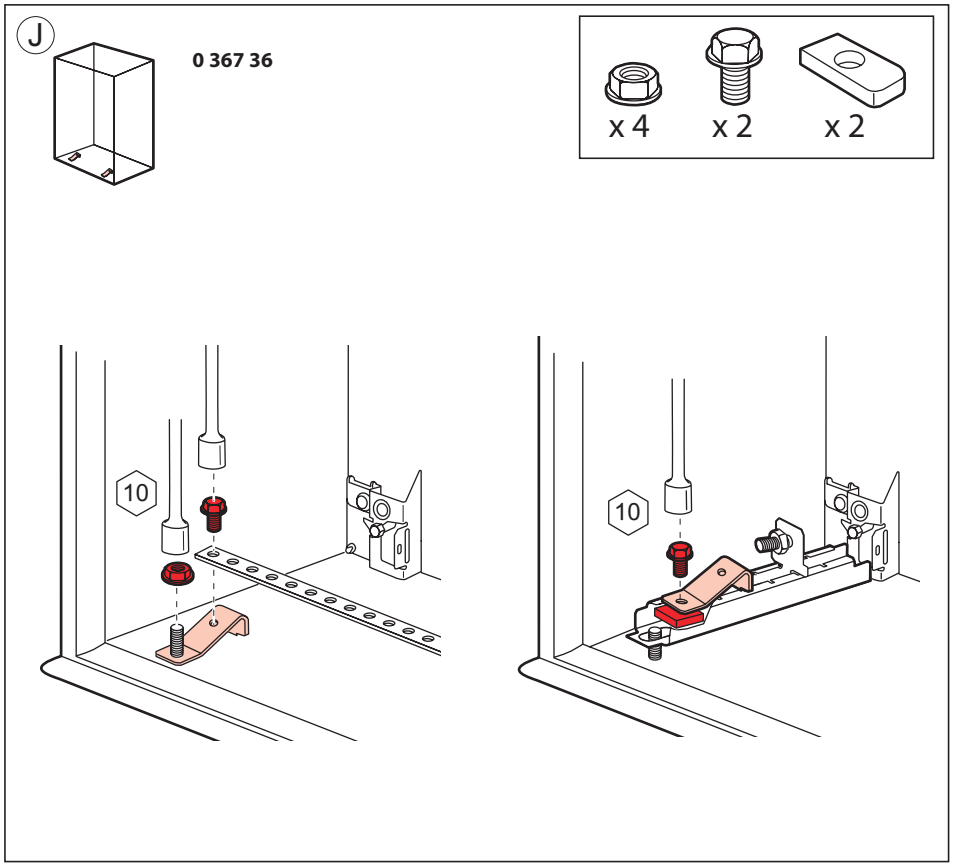

LE08262AA-00