504140...
504141...
504142...

MR

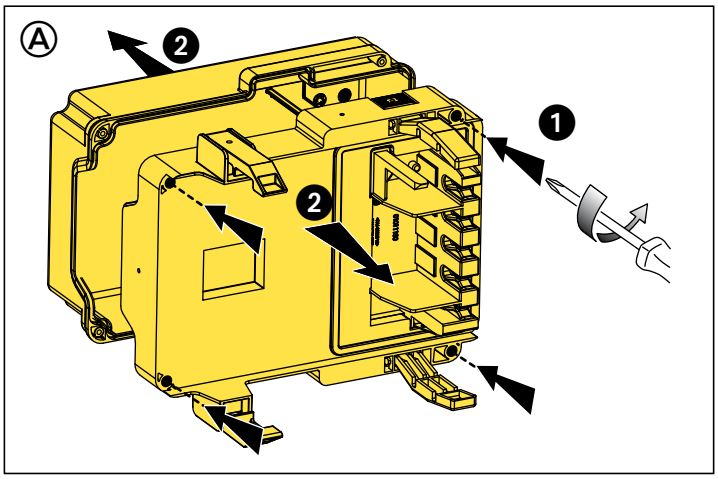

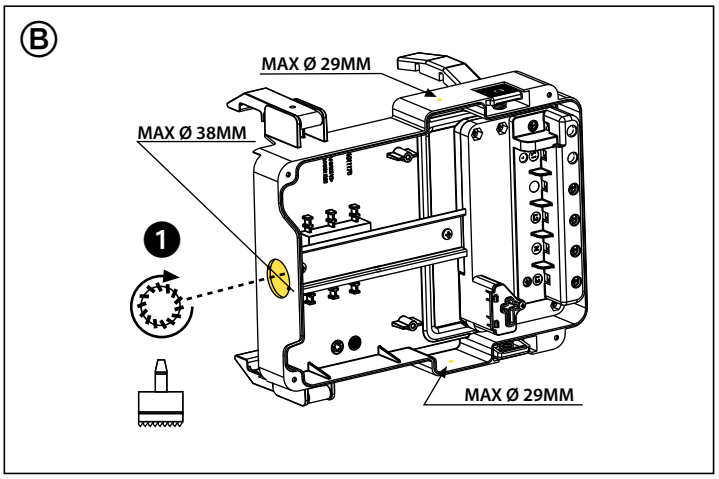

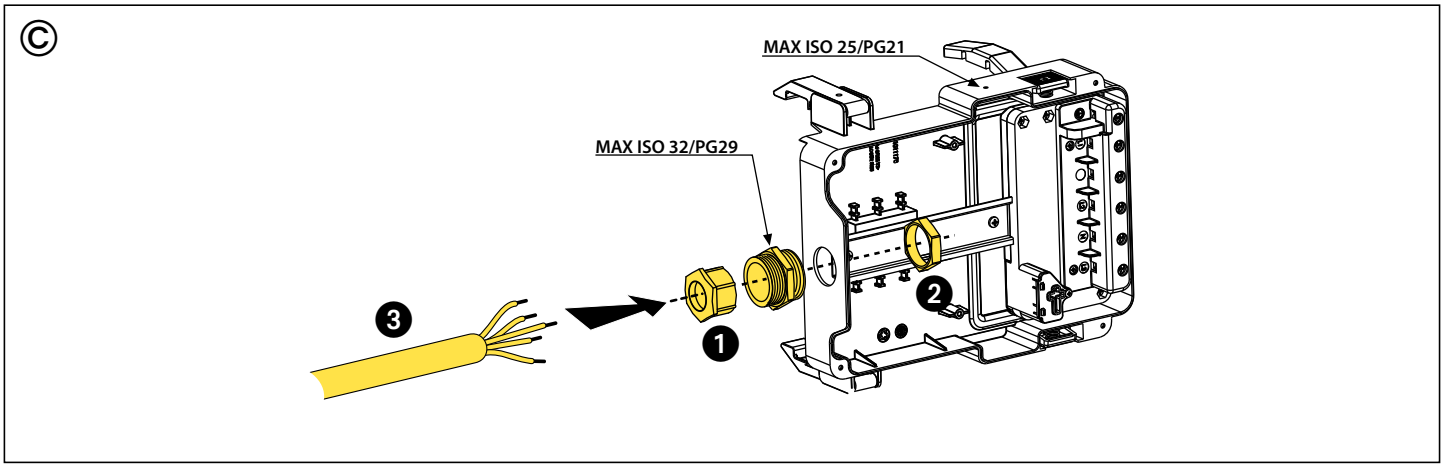

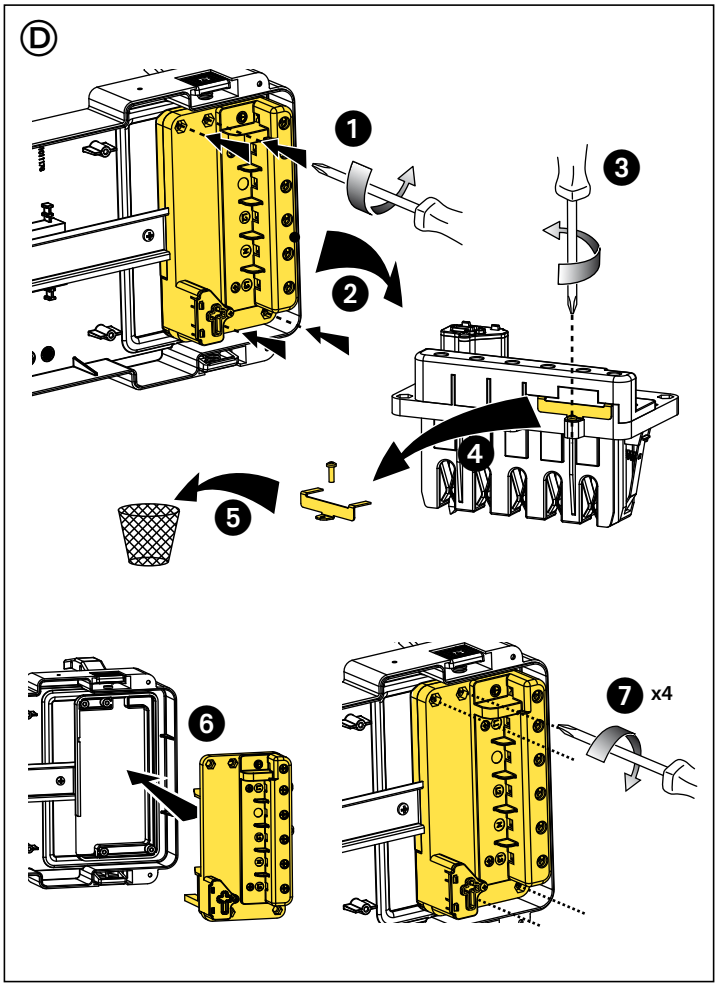

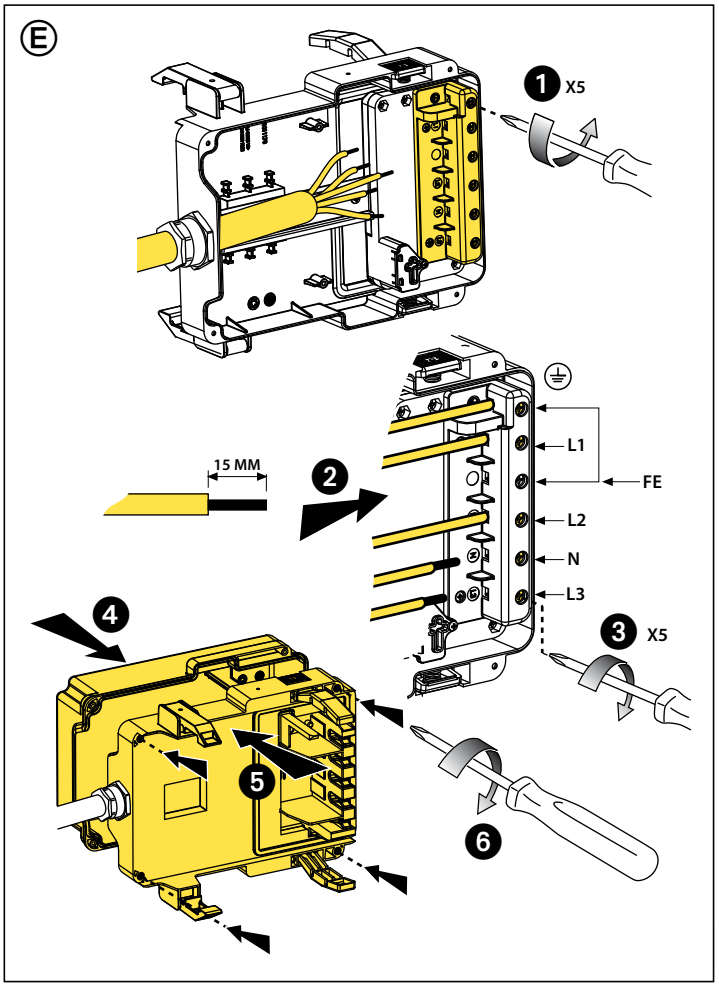

V0399A

10/08-01 PC

Ⓕ

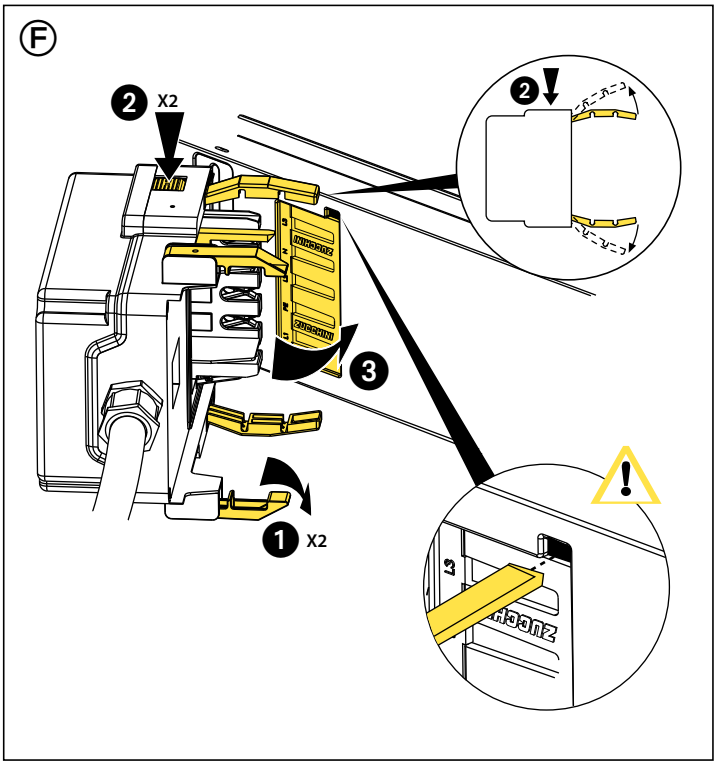
2 X2
2
3
1 X2
ZUCCHINI

Ⓖ

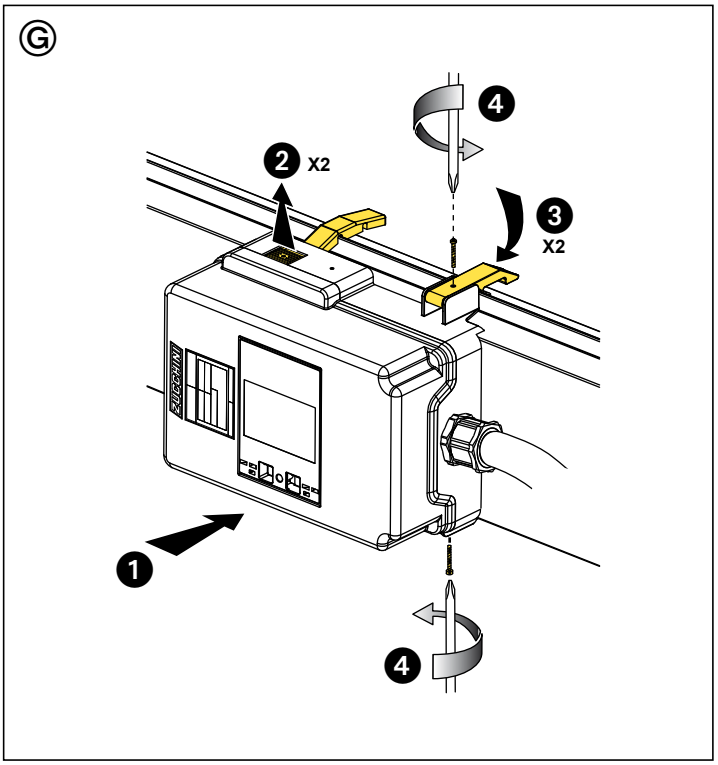
4
2 X2
3
X2
1
4
ZUCCHINI

Ⓗ

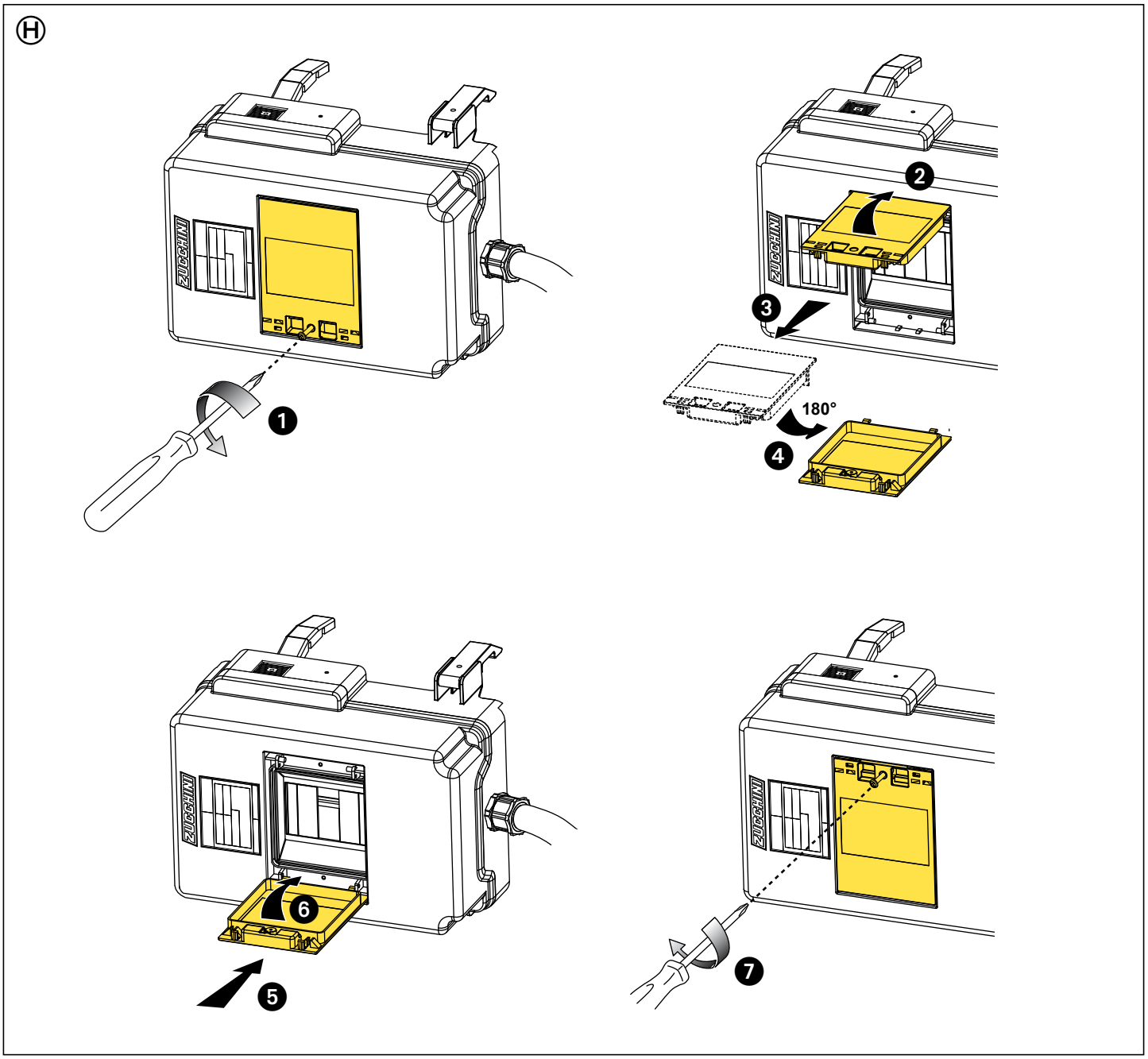
1
2
3
180°
4
5
6
7
ZUCCHINI