ZUCCHINI

84502101

Ⓐ

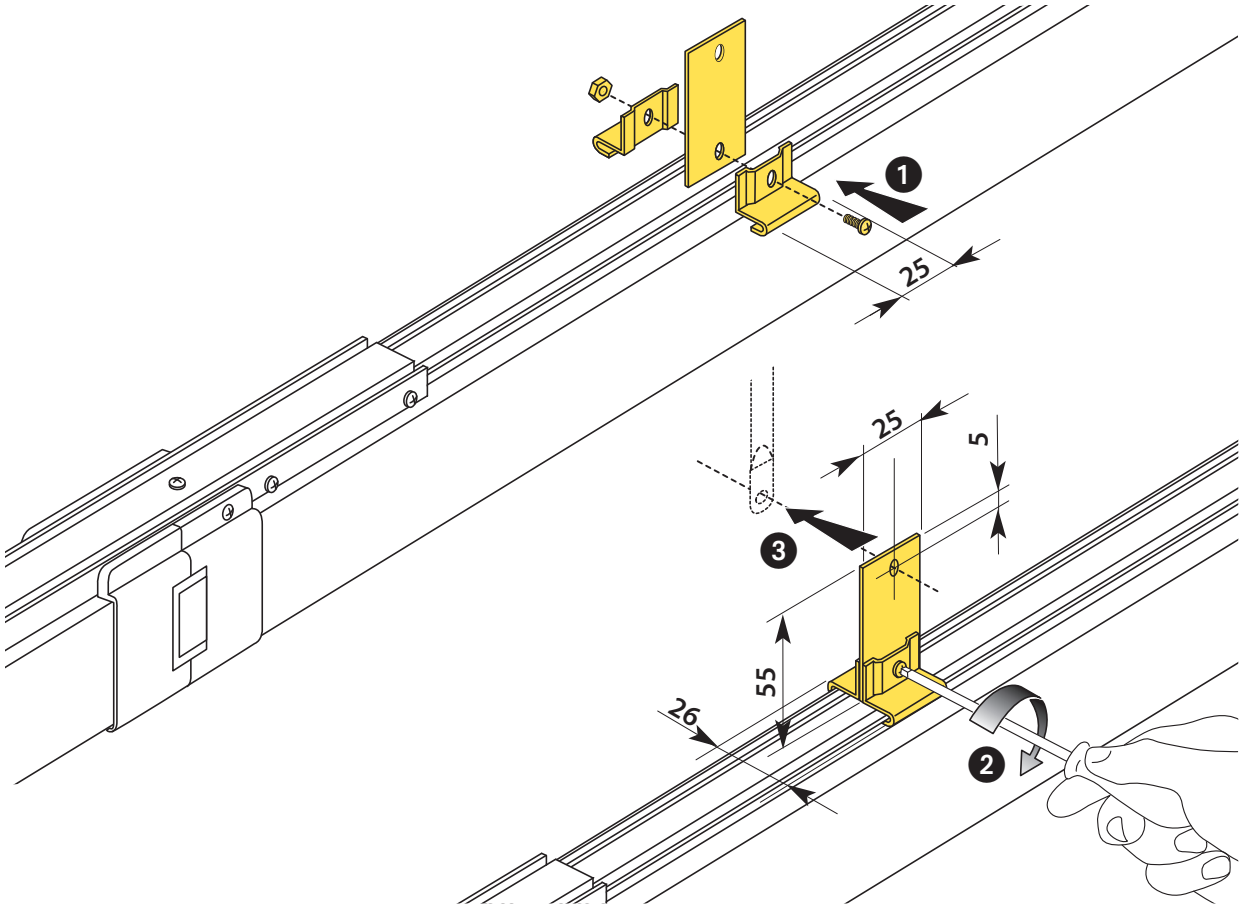

Ⓑ

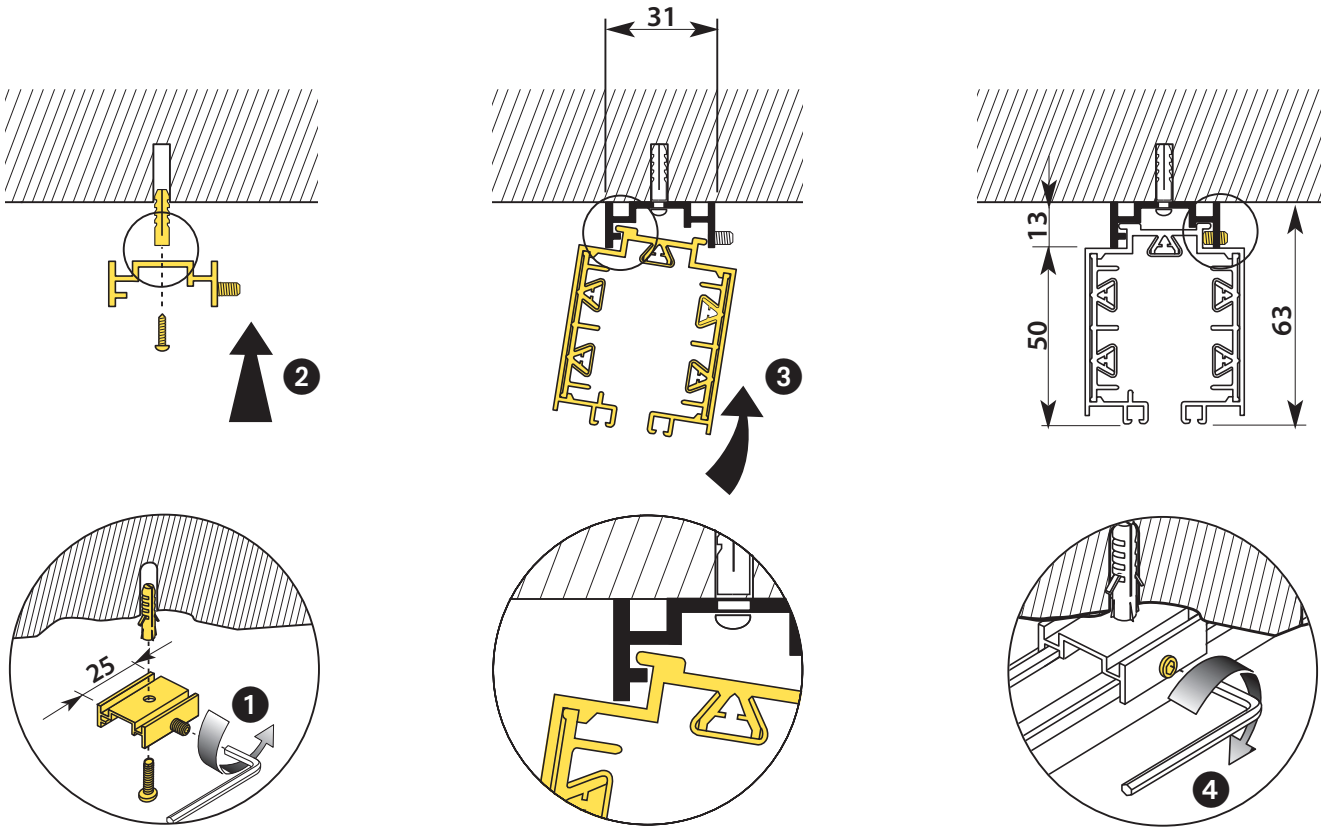

V0342A

04/09-01 PC