bticino

K4040

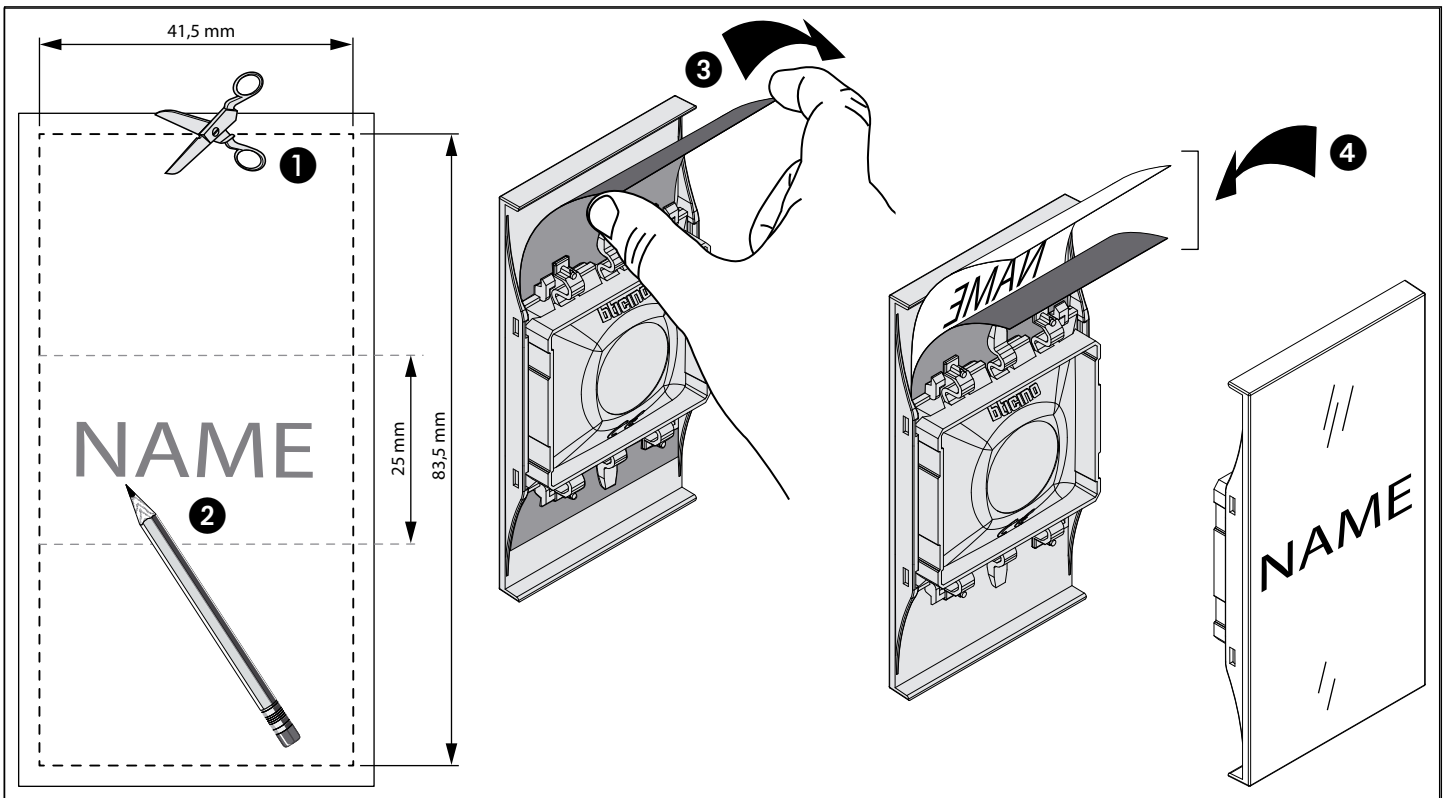

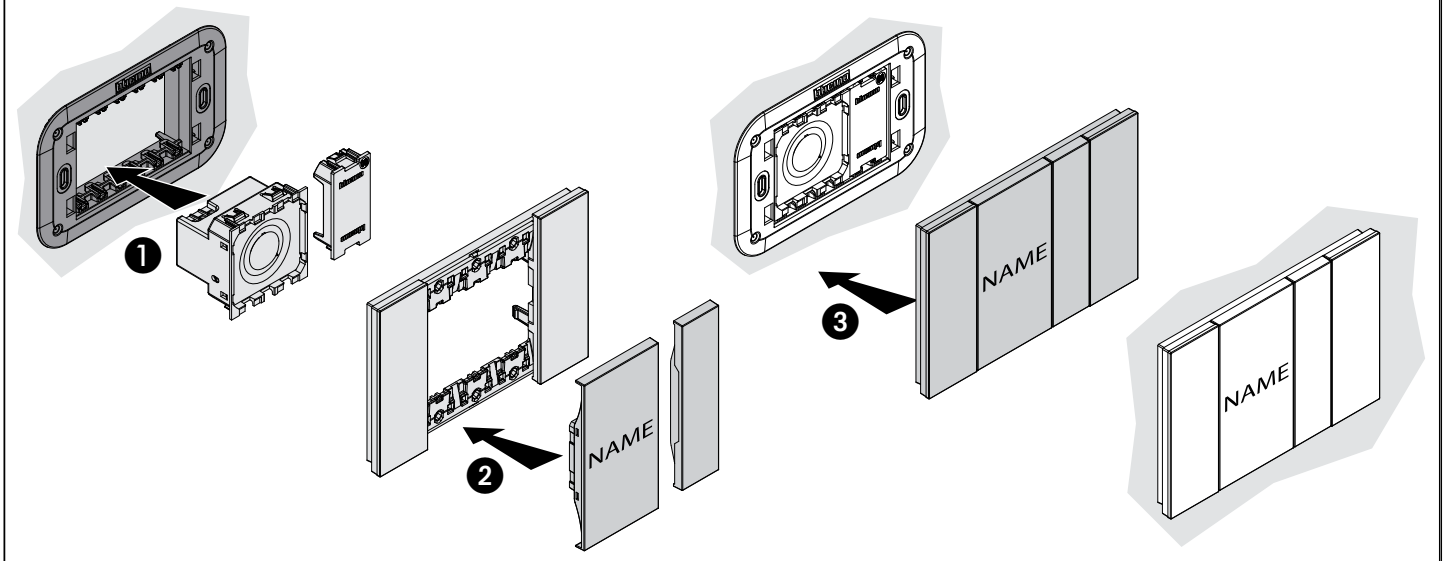

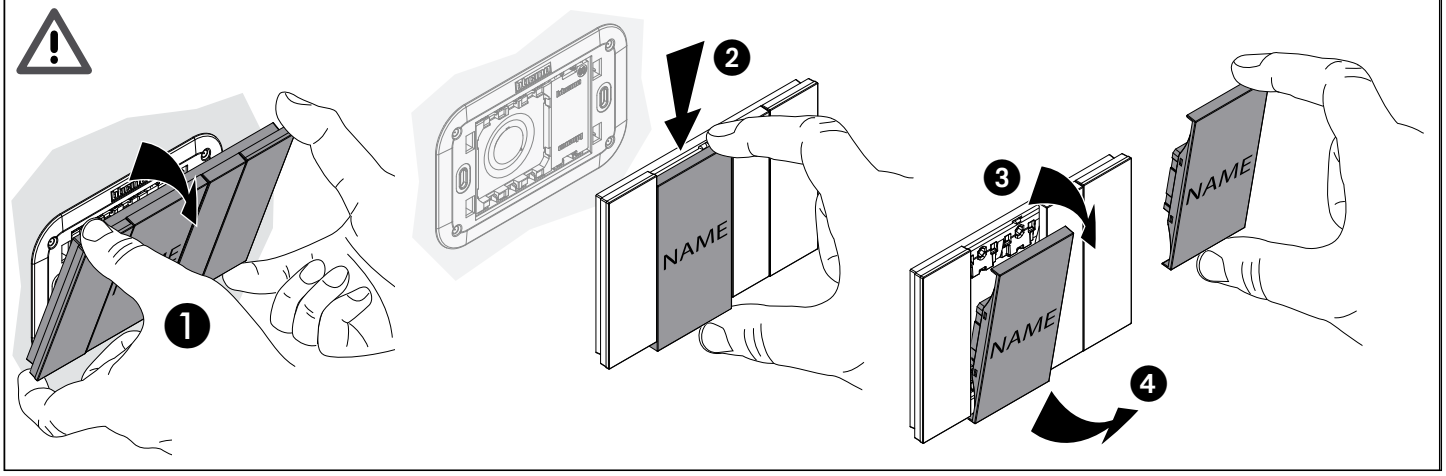

LE10436AB